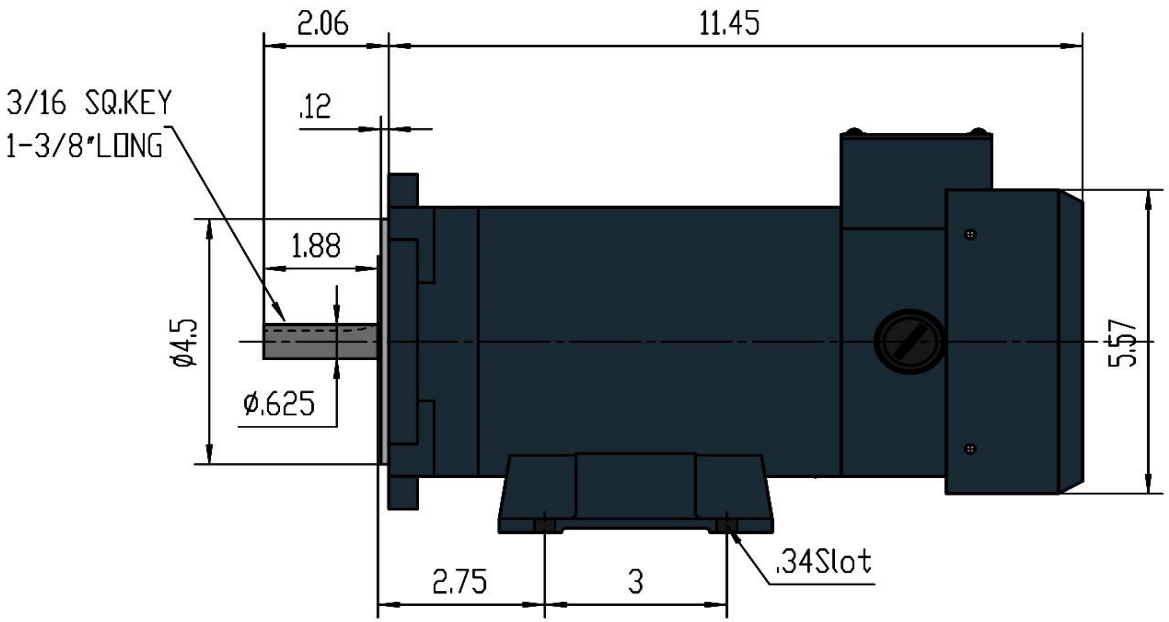

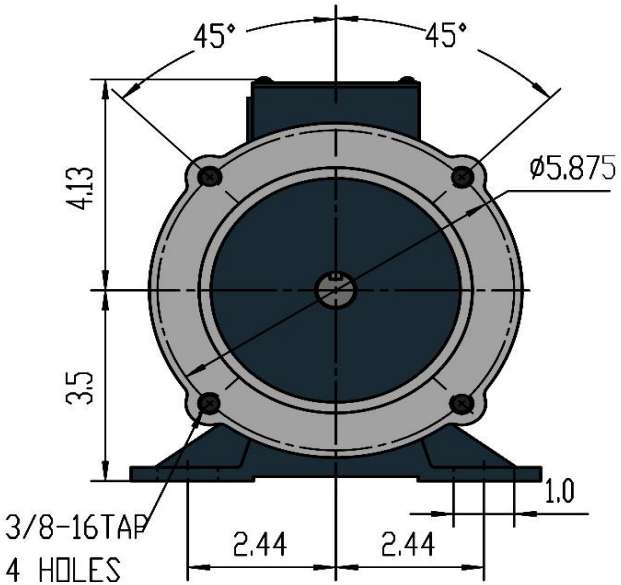

Customer is responsable in determining that MaxMotion product will fit/perform suitably in the intended application

Version: 1NIN

Revised: April 2020

MM7518FC

HP	RPM	Voltage	Amps	Const.	Frame	Insul.	Torque	P. Code	Wgt lbs	Rated
0,75	1750	180Vdc	4,9	TEFC	56C	Class H	27 in/lbs	K (SCR)	30	IP45